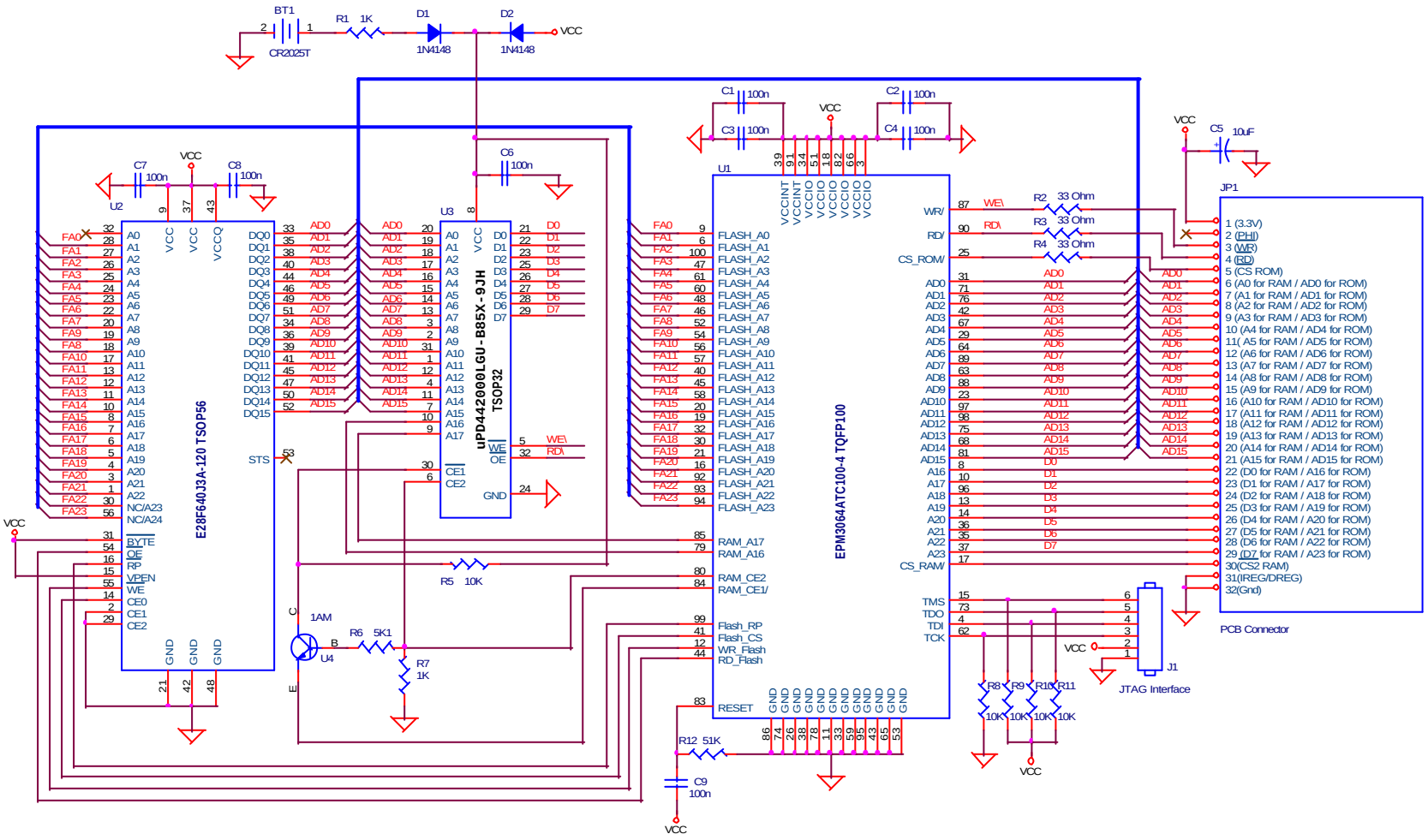

Flash cart for E28F320J3A-110 or E28F640J3A-120
and also larger chips.
(C) 2002 by Reiner Ziegler (www.reinerziegler.de)

Title	Gameboy Advance Flash Cartridge (c) by Reiner Ziegler	
Size B	Document Number	Rev A
Date: Wednesday, January 23, 2002	Sheet 1 of 1	